HIWATT

Power Supply for 50 Watt Amp
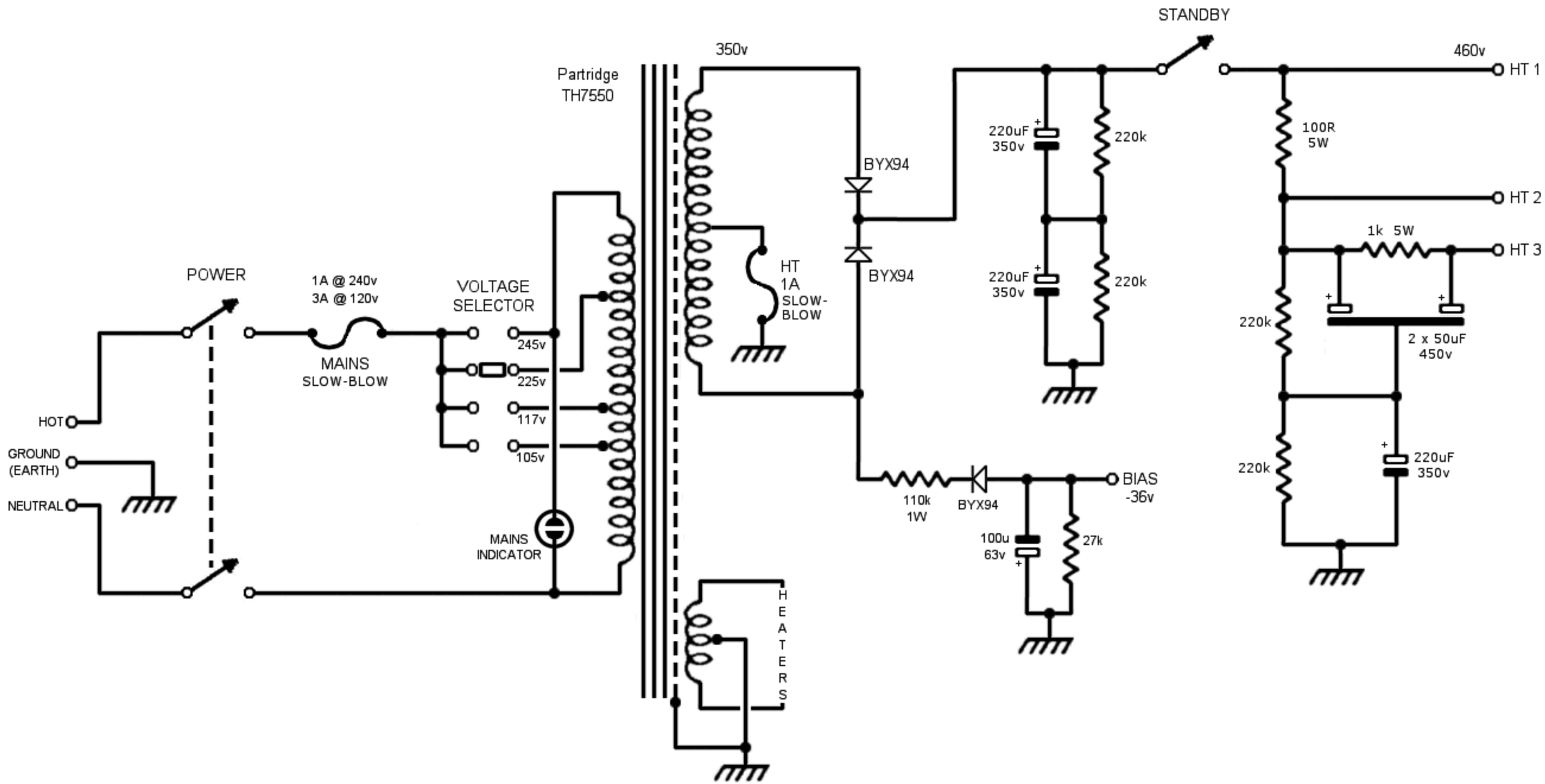
Drawing v 1.1 - Mark Huss